KLT-MAA12-IMX586 V1.0

48MP Sony IMX586 MIPI Interface Auto Focus Camera Module

Front View

Back View

www.KaiLapTech.com

Specifications

Camera Module No.	KLT-MAA12-IMX586 V1.0
Resolution	48MP
Image Sensor	IMX586
Sensor Type	1/2.0"
Pixel Size	0.8 um x 0.8 um
EFL	4.74 mm
F.NO	1.79
Pixel	8000 x 6000
View Angle	79.4°(DFOV), 67.2°(HFOV), 53.2°(VFOV)
Lens Dimensions	10.80 x 10.80 x 6.40 mm
Module Size	18.61 x 9.00 mm
Module Type	Auto Focus
Interface	MIPI
Auto Focus VCM Driver IC	DW9767
Lens Model	KLT-LENS-PS60122A100
Lens Type	650nm IR Cut
Operating Temperature	-20°C to +70°C
Mating Connector	OK-10F030-04

www.KaiLapTech.com sales@KaiLapTech.com Tel: (852) 6908 1256 Fax: (852) 3017 6778

All rights reserved @ Kai Lap Technologies Group Ltd. Specifications subject to change without notice.

KLT-MAA12-IMX586 V1.0

48MP Sony IMX586 MIPI Interface Auto Focus Camera Module

Top View

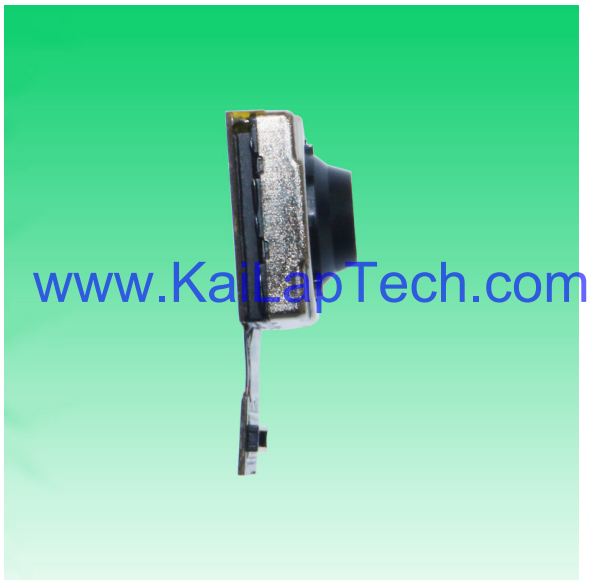

Side View

www.KaiLapTech.com

www.KaiLapTech.com

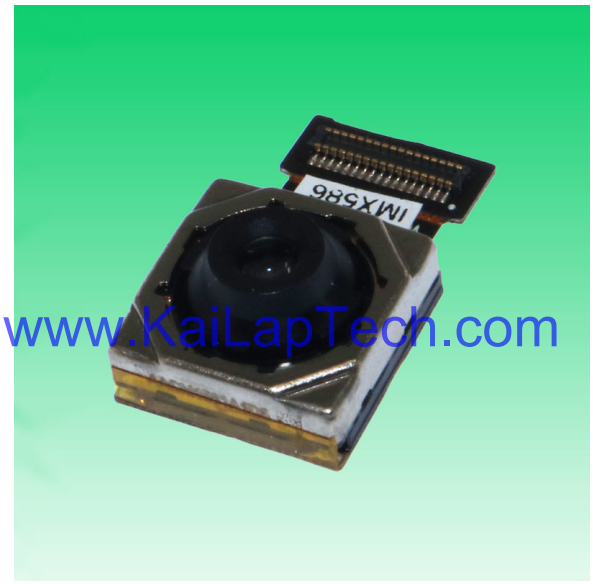

Bottom View

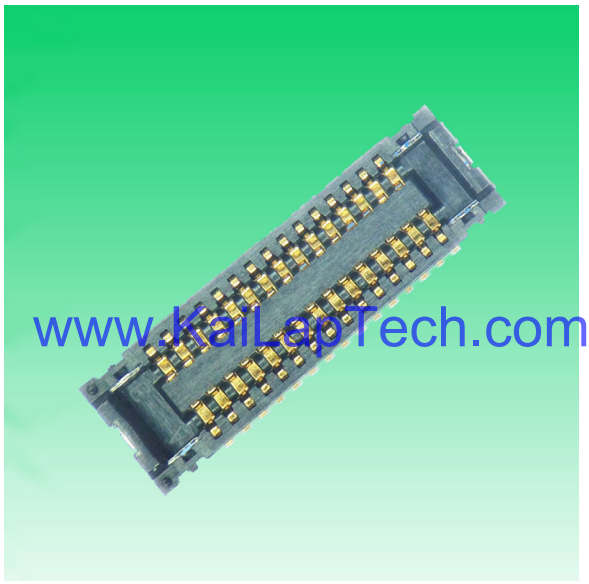

Mating Connector

www.KaiLapTech.com sales@KaiLapTech.com Tel: (852) 6908 1256 Fax: (852) 3017 6778

All rights reserved @ Kai Lap Technologies Group Ltd. Specifications subject to change without notice.

No	Name	
01	AVDD1	2.8V
02	AVDD2	1.8V
03	GND	
04	MCP	
05	MCN	
06	DGND	
07	MDPO	
08	MDNO	
09	DGND	
10	MDP2	
11	MDN2	
12	DOVDD	1.8V
13	DVDD1	1.1V
14	DVDD2	1.1V
15	PVDD	NC
16	PGND	NC
17	AFVDD	2.8V
18	AFGND	
19	MDN1	
20	MDP1	
21	DGND	
22	MDN3	
23	MDP3	
24	DGND	
25	XVS-OUT	NC
26	RESET	
27	SCL	
28	SDA	
29	MCLK	
30	AGND	

Version	Information	Date
V1.0	First Version	4-14-2022

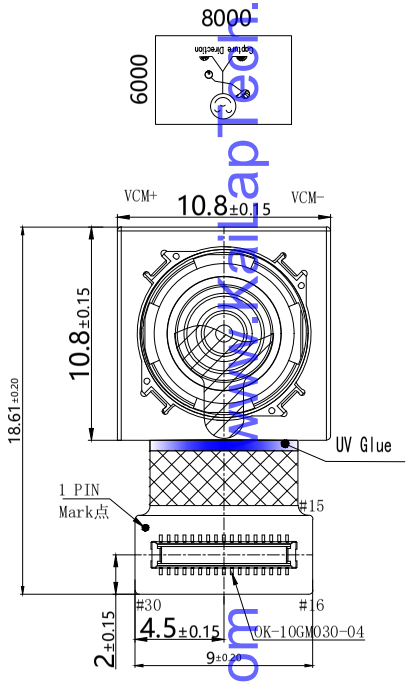

TOP VIEW

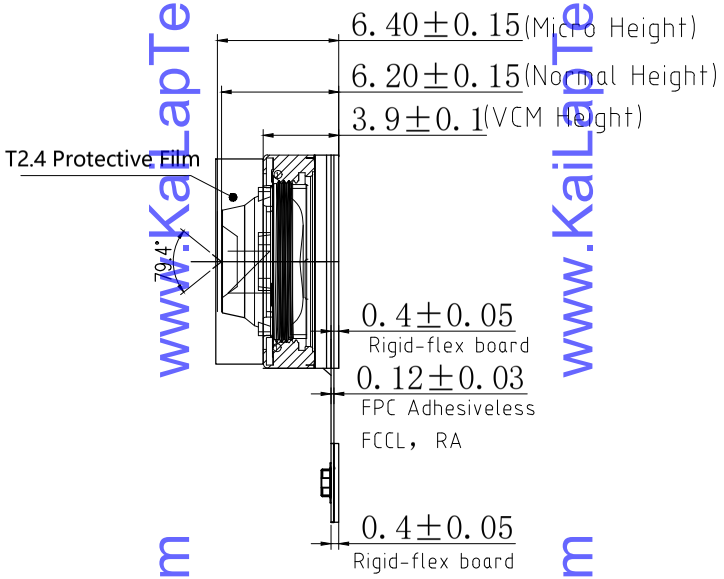

SIDE VIEW

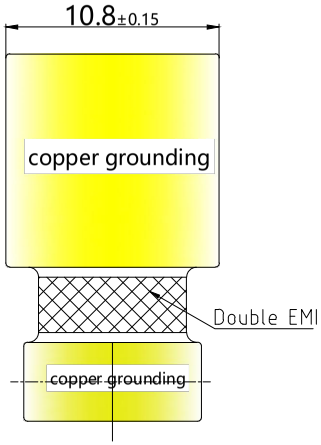

BOTTOM VIEW

NOTE:
1.Sensor I2C slave address: 0x20(W);0x21(R).
2.Driver IC:DW9767 I2C:0x18(W);0x19(R).

Parameter:

1、Sensor specification:

Image Sensor: IMX586-AAHJ5
Pixel: 0.8um×0.8um
Lens Type: 1/2
Important Voltage Description: DVDD1.1V (external power supply);

2、Lens specification:

FOV: 79.4°(D);67.2°(H);53.2°(V)
F/NO.: 1.79
TV distortion: <1.5%
Focal length: 4.74mm
Composition: 6P+IR FILTER
IR Cut Coating: 650nm±10nm@50%

Kai Lap Technologies Group Ltd

Designed By	Kevin	Model Name:	KLT-MAA12-IMX586 V1.0
Checked By	Aouly_Yan	Projection Type: Third Angle	Unit: mm / Material: ---------- / Scale: 1:1 / Sheet: 1 of 1 / Version: 1/0

www.KaiLapTech.com

Lens Model: KLT-LENS-PS60122A100

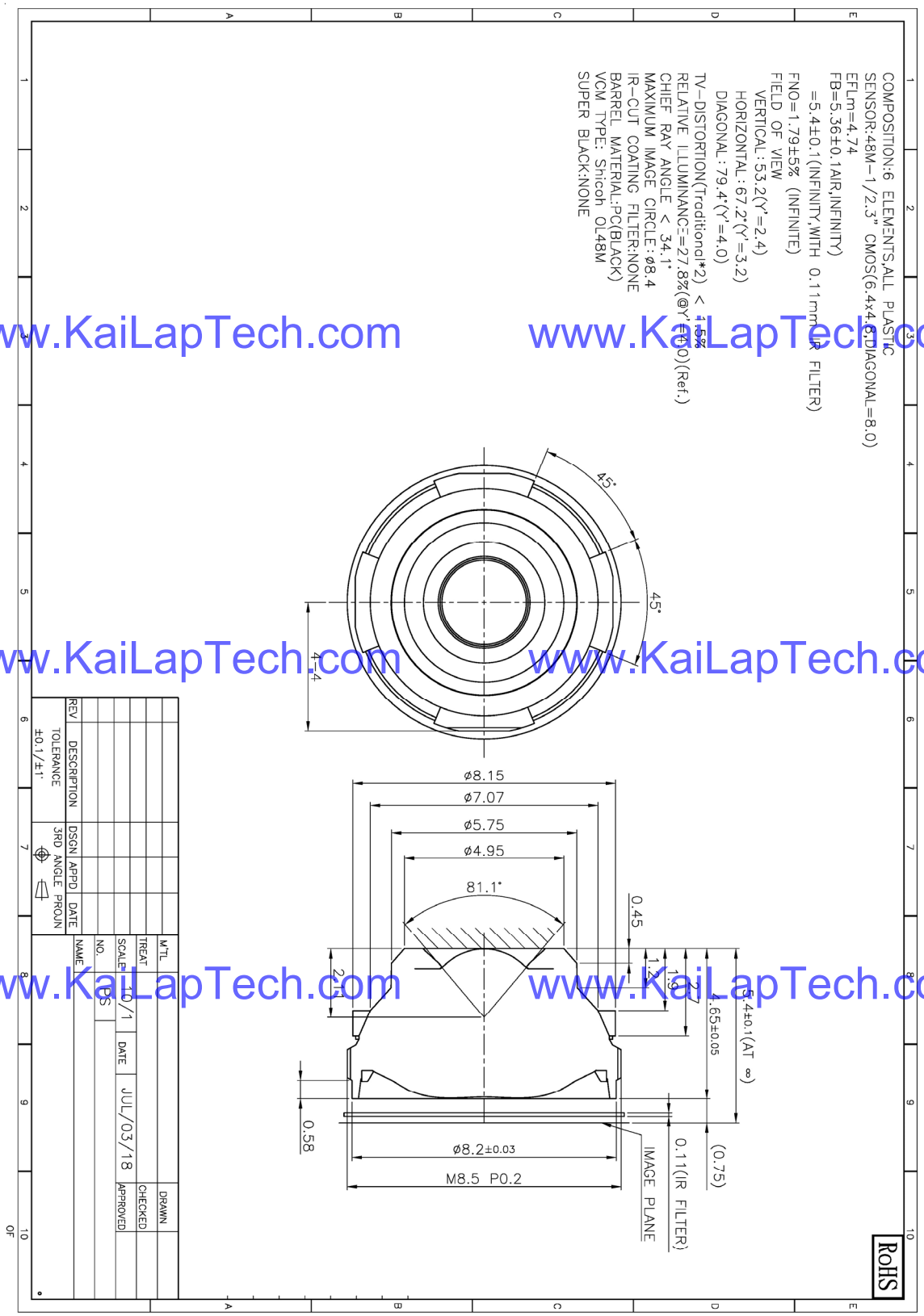

www.KaiLapTech.com www.KaiLapTech.com
www.KaiLapTech.com www.KaiLapTech.com
www.KaiLapTech.com www.KaiLapTech.com

All rights reserved @ Kai Lap Technologies Group Ltd. Specifications subject to change without notice.

DW9767

Bi-directional AF Driver IC with 8KBytes eFlash

FEATURES

Bi-directional current driver for autofocus
10-bit resolution DAC (Typ. +/- 100mA)
Embedded 8Kbyte eFlash memory
Smart Actuator Control (SAC^{TM}) mode
Supply voltage range (V_{DD}): 2.3V to 3.3V
I/O voltage range (V_{IN}): 1.8V to V_{DD}
Fast mode and Fast mode plus I^2C interface compatible
Power On Reset (POR)
Thermal Shutdown (TSD)
S/W Memory protection
Power down mode less than 1uA
Package: 8-pin WLCSP (0.77mm x 1.70mm x 0.30mm)

www.KaiLapTech.com

APPLICATIONS

Mobile cameras
Digital still cameras
Camcorders
Web cameras
Action cameras

www.KaiLapTech.com

GENERAL DESCRIPTION

The DW9767 is designed for linear control of bi-directional voice coil motors. The DW9767 is a single 10-bit DAC with a typical +/- 100mA output current sinking capability and has an 8Kbyte eFlash memory. This device features Smart Actuator Control (SAC^{TM}) mode which can minimize the mechanical vibration and achieve very fast mechanical settling time. The SAC^{TM} is protected by patent and registered trademark of DONGWOON ANATECH.

www.KaiLapTech.com

The DW9767 operates from a single 2.3V to 3.3V supply. The internal DAC and eFlash are controlled via an I^2C serial interface that operates at clock rate up to 1MHz. The DW9767 offers a power down mode with current consumption less than 1uA.DW9767 has software protection, it is available to guard against inadvertent writes.

www.KaiLapTech.com

The DW9767 can be used for auto focus applications in mobile cameras, digital still cameras, camcorders, web cameras and action cameras.

TYPICAL APPLICATION CIRCUIT

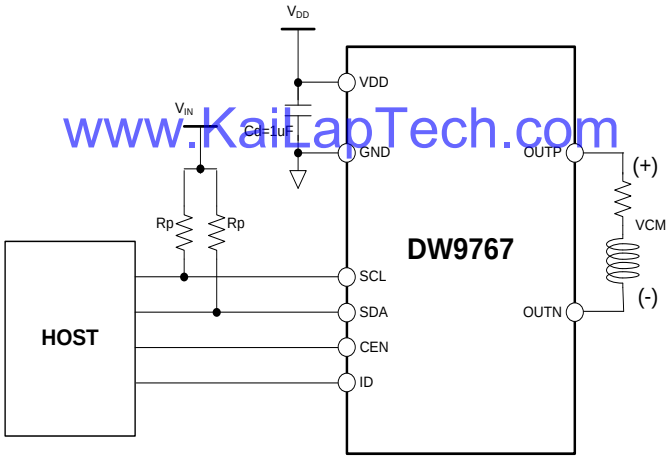

www.KaiLapTech.com

Bi-direction

REV	ECN NO	DRA	APPD	DATE
A	FIRST RELEASE	George Gao	Human Zhou	2013.09.18

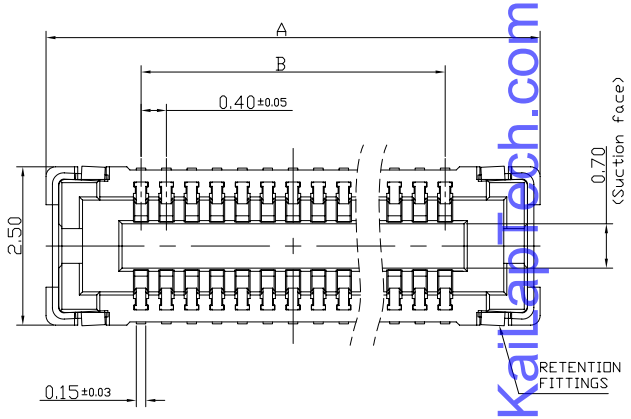

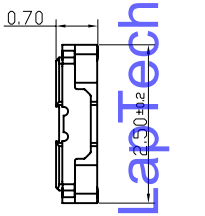

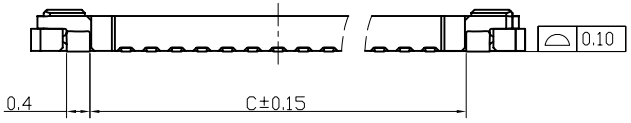

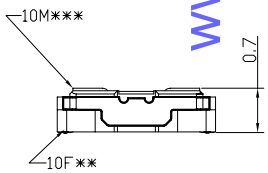

MATING SECTION

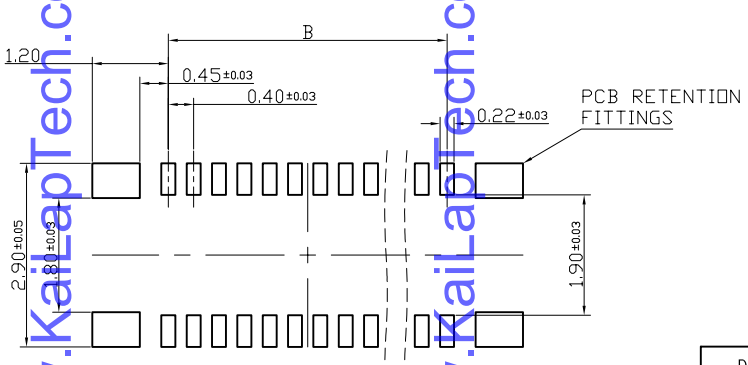

RECOMMENDED PCB LAYOUT

TABLE:

40	10.60	7.60
32	9.00	6.00
30	8.60	5.60
26	7.80	4.80
24	7.40	4.40
10	4.60	1.60
NUMBER OF CONTACTS	A	B

Specifications:

1) Material:
   1-1.Molded portion: LCP resin (UL94 V-0)
   1-2.Contact and Post: Copper alloy.
2) Surface treatment:
   2-1.Terminal portion: Base: Ni plating Surface: Au plating (except the terminal tips) ; Exposed nickel portions
   2-2.Metal clips: Base: Ni plating Surface: Au flash plating (except the terminal tips) Or Base: Ni plating Surface: Sn flash plating (except the terminal tips)
3) Characteristics:
   3-1. Rated voltage: 60V AC/DC
   3-2. Rated current: 0.3A/contact (Max. 5A at total contact)
   3-3. Insulation resistance: Min. 1000MΩ (initial)
   3-4. Breakdown voltage: 150V AC for 1 min.
   3-5.Saltwater spray resistance (header and socket mated): 24 hours, insulation resistance min.100MΩ, contact resistance max. 90mΩ
   3-6. Contact resistance: Max. 90mΩ
   3-7. Ambient temperature: -55℃-+85℃
   3-8. Storage temperature: -55℃-+85℃ (product only); -40℃-+50℃ (emboss packing)
   3-9. Composite insertion force: Max. 0.981N/contacts X contacts (initial)
   3-10. Composite removal force: Min. 0.165N/contacts X contacts
   3-11. Post holding force: Min. 0.49N/contacts
   3-12. Insertion and removal life: 50 times

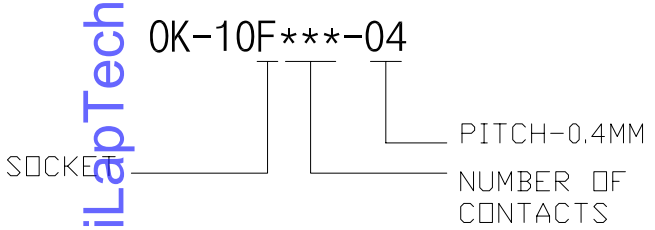

DIMENTION IN mm		OCN TECHNOLOGY				
TOLERANCE UNLESS OTHERWISE SPECIFIED		APPD:	TITLE: 0.4MM BTB (MATING HEIGHT 0.7H)			
. ±0.20	. ±2°	CHKD:	DWG NO: OK-10F***-04			
.0 ±0.10	.0 ±1°	DRA: George Gao 2013.09.18	PROJ	Q'TY	SIZE	SHEET	SCALE	REV
.00 ±0.05	.00±0.5°			--	A4	1/1	1:1	A
.000±0.03	.000±0.3°							

www.KaiLapTech.com

REV	ECN NO	DRA	APPD	DATE
A	FIRST RELEASE	George Gao	Human zhou	2013.09.12

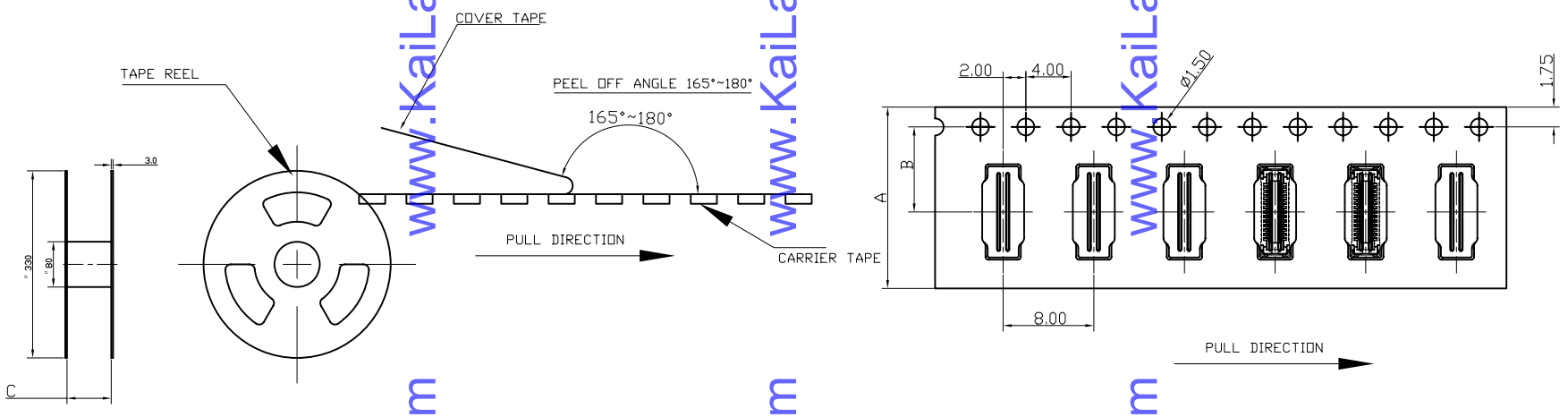

TABLE:

NUMBER OF CONTACTS	A	B	C	QTY/REEL
40	24.00	11.50	25.4	5000
32	16.00	7.50	17.4	
30				
26				
24				
10				

DIMENTION IN mm	
TOLERANCE UNLESS OTHERWISE SPECIFIED	
. ±0.20	. ±2°
.0 ±0.10	.0 ±1°
.00 ±0.05	.00±0.5°
.000±0.03	.000±0.3°

OCN® 正奇科技 OCN TECHNOLOGY

APPD:	TITLE: 0.4MM BTB (MATING HEIGHT 0.7H)
CHKD:	DWG NO: OK-10F***-04
DRA: George Gao 2013.09.18	

PROJ	Q'TY	SIZE	SHEET	SCALE	REV
	--	A4	1/1	1:1	A

www.KaiLapTech.com

SONY

Diagonal 8.000 mm (Type 1/2.0) 48Mega-Pixel CMOS Image Sensor with Square Pixel for Color Cameras

IMX586-AAJH5-C

General description and application

IMX586 is a diagonal 8.000 mm (Type 1/2.0) 48 Mega-pixel CMOS active pixel type stacked image sensor with a square pixel array. It adopts Sony's back-illuminated and stacked CMOS image sensor to achieve high speed image capturing by column parallel A/D converter circuits and high sensitivity and low noise image (comparing with conventional CMOS image sensor) through the backside illuminated imaging pixel structure. R, G, and B pigment primary color mosaic filter is employed. It operates with five power supply voltages: analog 2.9 V and 1.8V, digital 1.1 V, PLL-PHY 1.1V and 1.8 V for input/output interface and achieves low power consumption.
In addition, this product is designed for use in cellular phone and tablet PC. When using this for another application, Sony Semiconductor Solutions Corporation does not guarantee the quality and reliability of product. Therefore, don't use this for applications other than cellular phone and tablet PC. Consult your Sony Semiconductor Solutions Corporation sales representative if you have any questions.

www.KaiLapTech.com www.KaiLapTech.com

Functions and Features

- ◆Back-illuminated and stacked CMOS image sensor
- ◆Quad Bayer Coding color filter arrangement
- ◆Phase Detection Auto Focus (PDAF)
- ◆High Frame Rate 30fps@Full resolution (QBC Re-mosaic) / 30fps@QBC-HDR / 120fps@2x2 Adjacent Pixel Binning (16:9) / 240fps@2x2 Adjacent Pixel Binning V2H2(16:9)
- ◆High signal to noise ratio(SNR)
- ◆Dual sensor synchronization operation
- ◆Built-in 2D Dynamic Defect Pixel Correction
- ◆Lens Shading Correction (LSC)
- ◆Built-in temperature sensor
- ◆Output video format of RAW10/8, COMP8
- ◆QBC Re-mosaic function
- ◆QBC HDR function
- ◆Two PLLs for independent clock generation for pixel control and data output interface
- ◆CSI-2 serial data output
  MIPI D-PHY 2lane/4lane, Max. 2.5Gbps/lane, D-PHY spec. ver. 1.2 compliant
  MIPI C-PHY 1/2/3trio, Max 2.5Gsps/Trio, C-PHY spec ver. 1.0 compliant
- ◆2-wire serial communication (Supports I²C "Fast mode" and "Fast-mode Plus")
- ◆28K bit of OTP ROM for users

www.KaiLapTech.com www.KaiLapTech.com
www.KaiLapTech.com www.KaiLapTech.com

Sony Semiconductor Solutions Corporation reserves the right to change products and specifications without prior notice.
This information does not convey any license by any implication or otherwise under any patents or other right.
Application circuits shown, if any, are typical examples illustrating the operation of the devices. Sony Semiconductor Solutions Corporation cannot assume responsibility for any problems arising out of the use of these circuits.

Copyright 2018, 2019 Sony Semiconductor Solutions Corporation

Device Structure

◆CMOS image sensor
◆Image size : Diagonal 8.000 mm (Type 1/2.0)
◆Total number of pixels : 8032 (H) × 6248 (V) approx. 50.18 M pixels
◆Number of effective pixels : 8032 (H) × 6088 (V) approx. 48.89 M pixels
◆Number of active pixels : 8000 (H) × 6000 (V) approx. 48.00 M pixels
◆Chip size : 7.504 mm (H) × 5.659 mm (V)
◆Unit cell size : 0.80 µm (H) × 0.80 µm (V)
◆Substrate material : Silicon

Absolute Maximum Ratings

Item	Symbol	Ratings	Unit	notes
Supply voltage (analog1)	VANA1	-0.3 to +4.2	V	refer to VSS level
Supply voltage (analog2)	VANA2	-0.3 to +2.52	V	
Supply voltage (digital1, digital2(PLL-PHY))	VDIG1,2	-0.3 to +1.54	V	
Supply voltage (interface)	VIF	-0.3 to +2.52	V	
Input voltage (digital)	VI	-0.3 to +2.52	V	
Output voltage (digital)	VO	-0.3 to +2.52	V	
Guaranteed Operating temperature	TOPR	-20 to +70	˚C	
Guaranteed storage temperature	TSTG	-30 to +80	˚C	
Guaranteed performance temperature	TSPEC	-20 to +60	˚C	

www.KaiLapTech.com www.KaiLapTech.com
www.KaiLapTech.com www.KaiLapTech.com

Recommended Operating Voltage

Item	Symbol	Ratings	Unit	notes
Supply voltage (analog1)	VANA1	2.9 ± 0.1	V	refer to VSS level
Supply voltage (analog2)	VANA2	1.8 ± 0.1	V	
Supply voltage (digital1, digital2(PLL-PHY))	VDIG1,2	1.1 ± 0.1	V	
Supply voltage (interface)	VIF	1.8 ± 0.1	V	

www.KaiLapTech.com www.KaiLapTech.com

Copyright 2018, 2019 Sony Semiconductor Solutions Corporation

Camera Module Pinout Definition Reference Chart

OmniVision Sony Samsung On-Semi Aptina Himax GalaxyCore PixArt SmartSens Sensors	
Pin Signal	**Description**
DGND GND	ground for digital circuit
AGND	ground for analog circuit
PCLK DCK	DVP PCLK output
XCLR PWDN XSHUTDOWN STANDBY	power down active high with internal pull-down resistor
MCLK XVCLK XCLK INCK	system input clock
RESET RST	reset active low with internal pull-up resistor
NC NULL	no connect
SDA SIO_D SIOD	SCCB data
SCL SIO_C SIOC	SCCB input clock
VSYNC XVS FSYNC	DVP VSYNC output
HREF XHS	DVP HREF output
DOVDD	power for I/O circuit
AFVDD	power for VCM circuit
AVDD	power for analog circuit
DVDD	power for digital circuit
STROBE FSTROBE	strobe output
FSIN	synchronize the VSYNC signal from the other sensor
SID	SCCB last bit ID input
ILPWM	mechanical shutter output indicator
FREX	frame exposure / mechanical shutter
GPIO	general purpose inputs
SLASEL	I2C slave address select
AFEN	CEN chip enable active high on VCM driver IC
MIPI Interface	
MDN0 DN0 MD0N DATA_N DMO1N	MIPI 1st data lane negative output
MDP0 DP0 MD0P DATA_P DMO1P	MIPI 1st data lane positive output
MDN1 DN1 MD1N DATA2_N DMO2N	MIPI 2nd data lane negative output
MDP1 DP1 MD1P DATA2_P DMO2P	MIPI 2nd data lane positive output
MDN2 DN2 MD2N DATA3_N DMO3N	MIPI 3rd data lane negative output
MDP2 DP2 MD2P DATA3_P DMO3P	MIPI 3rd data lane positive output
MDN3 DN3 MD3N DATA4_N DMO4N	MIPI 4th data lane negative output
MDP3 DP3 MD3P DATA4_P DMO4P	MIPI 4th data lane positive output
MCN CLKN CLK_N DCKN	MIPI clock negative output
MCP CLKP MCP CLK_P DCKN	MIPI clock positive output
DVP Parallel Interface	
D0 DO0 Y0	DVP data output port 0
D1 DO1 Y1	DVP data output port 1
D2 DO2 Y2	DVP data output port 2
D3 DO3 Y3	DVP data output port 3
D4 DO4 Y4	DVP data output port 4
D5 DO5 Y5	DVP data output port 5
D6 DO6 Y6	DVP data output port 6
D7 DO7 Y7	DVP data output port 7
D8 DO8 Y8	DVP data output port 8
D9 DO9 Y9	DVP data output port 9
D10 DO10 Y10	DVP data output port 10
D11 DO11 Y11	DVP data output port 11

www.KaiLapTech.com www.KaiLapTech.com
www.KaiLapTech.com www.KaiLapTech.com
www.KaiLapTech.com www.KaiLapTech.com

All rights reserved @ Kai Lap Technologies Group Ltd. Specifications subject to change without notice.

CMOS CAMERA MODULES

your BEST camera module partner

Cameras Applications

www.KaiLapTech.com www.KaiLapTech.com

www.KaiLapTech.com www.KaiLapTech.com

www.KaiLapTech.com www.KaiLapTech.com

www.KaiLapTech.com sales@KaiLapTech.com Tel: (852) 6908 1256 Fax: (852) 3017 6778

All rights reserved @ Kai Lap Technologies Group Ltd. Specifications subject to change without notice.

Camera Reliability Test

Reliability Inspection Item			Testing Method	Acceptance Criteria
Category		Item		
Environmental	Storage Temperature	High 60°C 96 Hours	Temperature Chamber	No Abnormal Situation
		Low -20°C 96 Hours	Temperature Chamber	No Abnormal Situation
	Operation Temperature	High 60°C 24 Hours	Temperature Chamber	No Abnormal Situation
		Low -20°C 24 Hours	Temperature Chamber	No Abnormal Situation
	Humidity	60°C 80% 24 Hours	Temperature Chamber	No Abnormal Situation
	Thermal Shock	High 60°C 0.5 Hours Low -20°C 0.5 Hours Cycling in 24 Hours	Temperature Chamber	No Abnormal Situation
Physical	Drop Test (Free Falling)	Without Package 60cm	10 Times on Wood Floor	Electrically Functional
		With Package 60cm	10 Times on Wood Floor	Electrically Functional
	Vibration Test	50Hz X-Axis 2mm 30min	Vibration Table	Electrically Functional
		50Hz Y-Axis 2mm 30min	Vibration Table	Electrically Functional
		50Hz Z-Axis 2mm 30min	Vibration Table	Electrically Functional
	Cable Tensile Strength Test	Loading Weight 4 kg 60 Seconds Cycling in 24 Hours	Tensile Testing Machine	Electrically Functional
Electrical	ESD Test	Contact Discharge 2 KV	ESD Testing Machine	Electrically Functional
		Air Discharge 4 KV	ESD Testing Machine	Electrically Functional
	Aging Test	On/Off 30 Seconds Cycling in 24 Hours	Power Switch	Electrically Functional
	USB Connector	On/Off 250 Times	Plug and Unplug	Electrically Functional

www.KaiLapTech.com www.KaiLapTech.com
www.KaiLapTech.com www.KaiLapTech.com
www.KaiLapTech.com www.KaiLapTech.com

All rights reserved @ Kai Lap Technologies Group Ltd. Specifications subject to change without notice.

CMOS CAMERA MODULES

Camera Inspection Standard

your BEST camera module partner

Inspection Item			Inspection Method	Standard of Inspection
Category		Item		
Appearance	FPC/ PCB	Color	The Naked Eye	Major Difference is Not Allowed.
		Be Torn/Chopped	The Naked Eye	Copper Crack Exposure is Not Allowed.
		Marking	The Naked Eye	Clear, Recognizable (Within 30cm Distance)
	Holder	Scratches	The Naked Eye	The Inside Crack Exposure is Not Allowed
		Gap	The Naked Eye	Meet the Height Standard
		Screw	The Naked Eye	Make Sure Screws Are Presented (If Any)
		Damage	The Naked Eye	The Inside Crack Exposure is Not Allowed
	Lens	Scratch	The Naked Eye	No Effect On Resolution Standard
		Contamination	The Naked Eye	No Effect On Resolution Standard
		Oil Film	The Naked Eye	No Effect On Resolution Standard
		Cover Tape	The Naked Eye	No Issue On Appearance.
Function	Image	No Communication	Test Board	Not Allowed
		Bright Pixel	Black Board	Not Allowed In the Image Center
		Dark Pixel	White board	Not Allowed In the Image Center
		Blurry	The Naked Eye	Not Allowed
		No Image	The Naked Eye	Not Allowed
		Vertical Line	The Naked Eye	Not Allowed
		Horizontal Line	The Naked Eye	Not Allowed
		Light Leakage	The Naked Eye	Not Allowed
		Blinking Image	The Naked Eye	Not Allowed
		Bruise	Inspection Jig	Not Allowed
		Resolution	Chart	Follows Outgoing Inspection Chart Standard
		Color	The Naked Eye	No Issue
		Noise	The Naked Eye	Not Allowed
		Corner Dark	The Naked Eye	Less Than 100px By 100px
		Color Resolution	The Naked Eye	No Issue
Dimension		Height	The Naked Eye	Follows Approval Data Sheet
		Width	The Naked Eye	Follows Approval Data Sheet
		Length	The Naked Eye	Follows Approval Data Sheet
		Overall	The Naked Eye	Follows Approval Data Sheet

www.KaiLapTech.com www.KaiLapTech.com
www.KaiLapTech.com www.KaiLapTech.com
www.KaiLapTech.com www.KaiLapTech.com

www.KaiLapTech.com sales@KaiLapTech.com Tel: (852) 6908 1256 Fax: (852) 3017 6778

All rights reserved @ Kai Lap Technologies Group Ltd. Specifications subject to change without notice.

KLT Package Solutions

KLT Camera Module

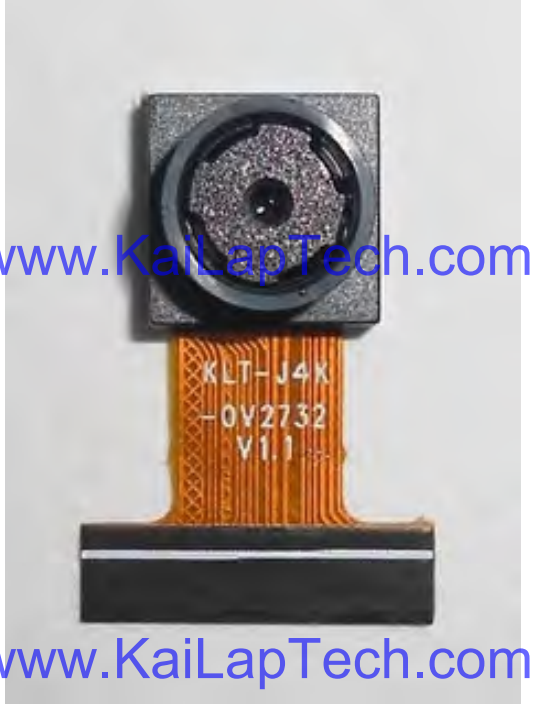

www.KaiLapTech.com

Complete with Lens Protection Film

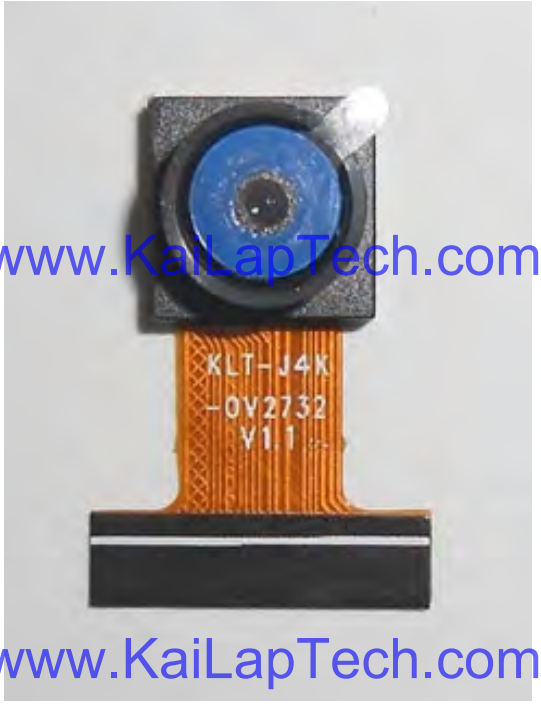

www.KaiLapTech.com

Tray with Grid and Space

www.KaiLapTech.com

Place Cameras on the Tray

www.KaiLapTech.com

www.KaiLapTech.com sales@KaiLapTech.com Tel: (852) 6908 1256 Fax: (852) 3017 6778

All rights reserved @ Kai Lap Technologies Group Ltd. Specifications subject to change without notice.

CMOS CAMERA MODULES

your BEST camera module partner

Camera Modules Package Solution

Full Tray of Cameras

Cover Tray with Lid

Put Tray into Anti-Static Bag

Vacuum the Anti-Static Bag

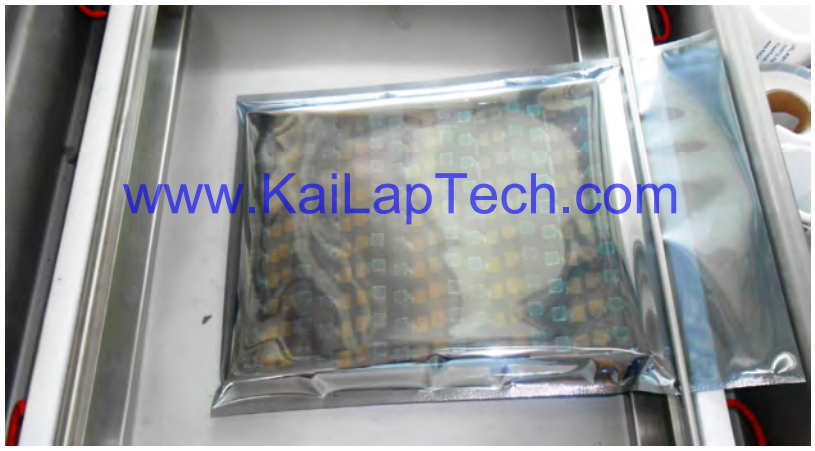

www.KaiLapTech.com

www.KaiLapTech.com sales@KaiLapTech.com Tel: (852) 6908 1256 Fax: (852) 3017 6778

All rights reserved @ Kai Lap Technologies Group Ltd. Specifications subject to change without notice.

Camera Modules Package Solution

Sealed Vacuum Bag with Labels
1. Model and Description 2. Quantity 3. Shipping Date 4. Caution

www.KaiLapTech.com www.KaiLapTech.com
www.KaiLapTech.com www.KaiLapTech.com
www.KaiLapTech.com www.KaiLapTech.com

All rights reserved @ Kai Lap Technologies Group Ltd. Specifications subject to change without notice.

Large Order Package Solution

Place Foam Sheets Between Trays

Foam Sheets are Slightly Larger than Trays

www.KaiLapTech.com

www.KaiLapTech.com

Place Foam Sheets and Trays into Box

Foam Sheets are Tightly Fitting Box

www.KaiLapTech.com sales@KaiLapTech.com Tel: (852) 6908 1256 Fax: (852) 3017 6778

All rights reserved @ Kai Lap Technologies Group Ltd. Specifications subject to change without notice.

Small Order Package Solution

Place Foam Sheets and Trays into Small Box

Foam Sheets are Nicely Fitting the Small Box

www.KaiLapTech.com

www.KaiLapTech.com

Package in Small Box for Shipment

Place Small Boxes into Larger Box

www.KaiLapTech.com sales@KaiLapTech.com Tel: (852) 6908 1256 Fax: (852) 3017 6778

All rights reserved @ Kai Lap Technologies Group Ltd. Specifications subject to change without notice.

Carbon Box Package Solution

Seal the Carbon Box

Final Package Labelled Box

Carbon Box Ready for Shipment

1. Delivery Address and Phone No. 2. Box No. and Ship Date 3. Fragile Caution

All rights reserved @ Kai Lap Technologies Group Ltd. Specifications subject to change without notice.

Sample Order Package Solution

Place Sample into Small Anti-Static Bag

Place Connectors into Small Ant-Static Bag

www.KaiLapTech.com

Sample Labels on the Small Bag
1. Camera Module or Connector Model 2. Shipping Date and Quantity 3. Caution

www.KaiLapTech.com www.KaiLapTech.com

All rights reserved @ Kai Lap Technologies Group Ltd. Specifications subject to change without notice.

Connectors Large Order Package Solution

Connectors in a Wheel

Label Connectors in the Wheel

The Wheel is Perfectly Fitting the Box

Connectors Box Ready for Shipment

www.KaiLapTech.com sales@KaiLapTech.com Tel: (852) 6908 1256 Fax: (852) 3017 6778

All rights reserved @ Kai Lap Technologies Group Ltd. Specifications subject to change without notice.

CMOS CAMERA MODULES

your BEST camera module partner

Company Kai Lap Technologies (KLT)

Kai Lap Technologies Group Limited. (KLT) was established in 2009, a next-generation technology driven manufacturer specialized in research, design, and produce of audio and video products. KLT is occupying 20,000 square feet automated plants with 100 employees of annual throughput 30,000,000 units cameras.

KLT provides OEM, ODM design, contract manufacturing, and builds the camera products. You may provide the requirements to us, even with a hand draft, our sales and engineering work together to meet your needs. We consider ourselves your last-term partner in developing practical and innovative solutions.

Our team covers everything from initial concept development to mass produced product. KLT specializes in customized camera design, raw material, electronic engineering, firmware/software development, product testing, and packing design. Our experienced strategic supply systems offer a robust and dependable manufacturing capacity for orders of various sizes.

www.KaiLapTech.com www.KaiLapTech.com

www.KaiLapTech.com

www.KaiLapTech.com

Limited Warranty

KLT provides the following limited warranty if you purchased the Product(s) directly from KLT company or from KLT's website, www.KaiLapTech.com. Product(s) purchased from other sellers or sources are not covered by this Limited Warranty. KLT guarantees that the Product(s) will be free from defects in materials and workmanship under normal use for a period of one (1) year from the date you receive the product ("Warranty Period").

www.KaiLapTech.com www.KaiLapTech.com

For all Product(s) that contain or develop material defects in materials or workmanship during the Warranty Period, KLT will, at its sole option, either: (i) repair the Product(s); (ii) replace the Product(s) with a new or refurbished Product(s) (replacement Product(s) being of identical model or functional equivalent); or (iii) provide you a refund of the price you paid for the Product(s).

This Limited Warranty of KLT is solely limited to repair and/or replacement on the terms set forth above. KLT is not reliable or responsible for any subsequential events.

www.KaiLapTech.com sales@KaiLapTech.com Tel: (852) 6908 1256 Fax: (852) 3017 6778

All rights reserved @ Kai Lap Technologies Group Ltd. Specifications subject to change without notice.

CMOS CAMERA MODULES

your BEST camera module partner

KLT Strength

Powerful Factory

Professional Service

Promised Delivery

www.KaiLapTech.com sales@KaiLapTech.com Tel: (852) 6908 1256 Fax: (852) 3017 6778

All rights reserved @ Kai Lap Technologies Group Ltd. Specifications subject to change without notice.